VKI90DI

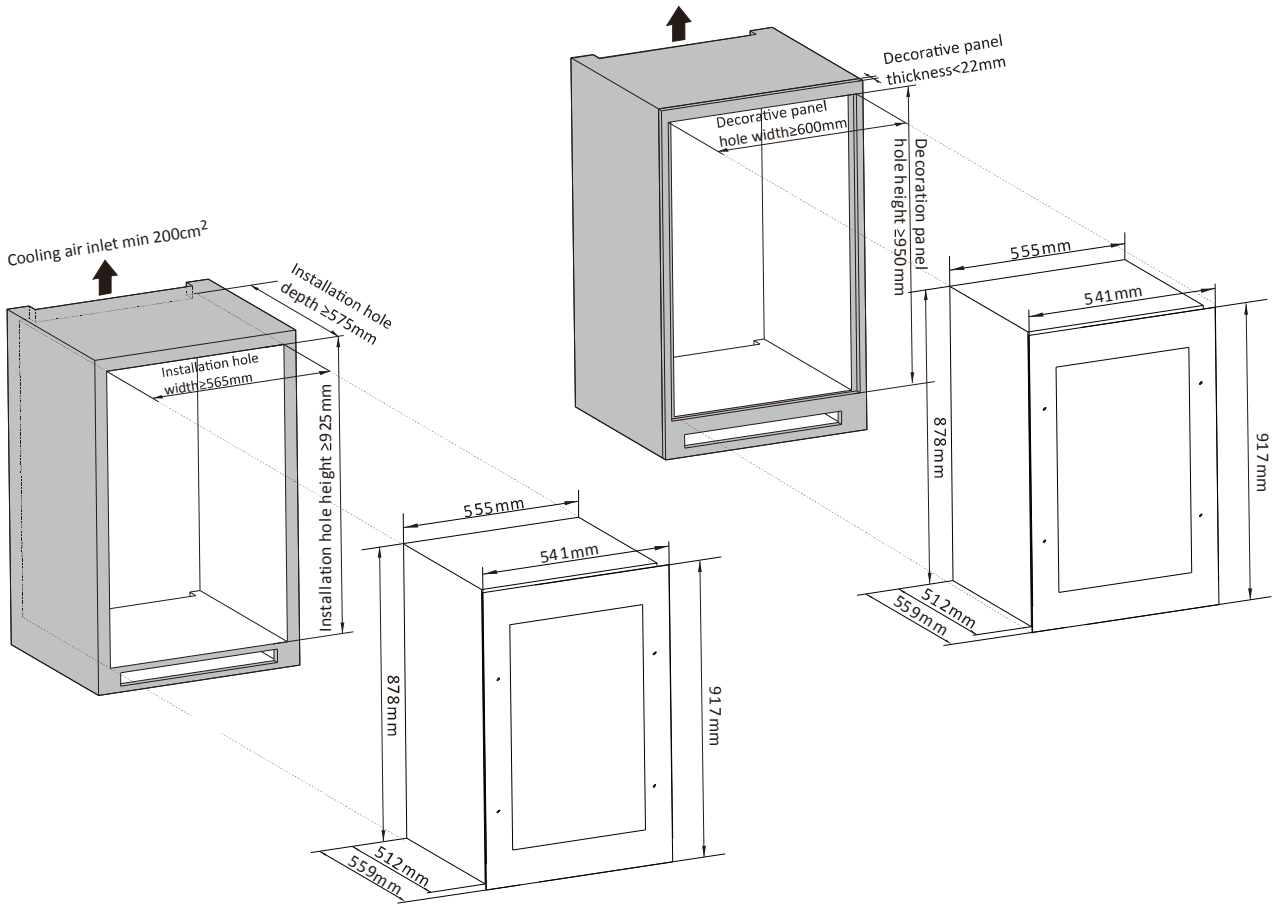
Cooling air inlet min 200cm2
Installation hole depth ≥575mm
Installation hole width≥565mm
Installation hole height ≥925mm
555mm
541mm
878mm
917mm
512mm
559mm
Decorative panel thickness<22mm
Decorative panel hole width≥600mm
Decoration panel hole height ≥950mm
555mm
541mm
878mm
917mm
512mm
559mm

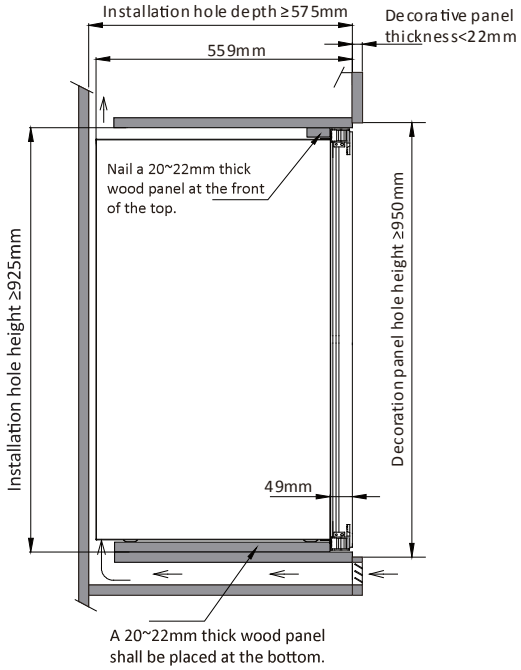
Installation hole depth ≥575mm
Decorative panel thickness<22mm
559mm
Nail a 20~22mm thick wood panel at the front of the top.
Installation hole height ≥925mm
Decoration panel hole height ≥950mm
49mm
A 20~22mm thick wood panel shall be placed at the bottom.